External Filtering and Wavelet Domain Thresholding-based Denoising Method for AWGN corrupted images

Sumit Singh Parihar[1], Shailesh Khaparkar[2]

Student[1], Assistant Professor[2]

Department of Electronics & Communication Engineering[1, 2],
Gyan Ganga Institute of Technology & Sciences, Jabalpur

ABSTRACT—In this work an image de-noising method with external bilateral filtering and wavelet domain thresholding has been proposed. In gaussian filtering fails to denoise an image at edges where the spatial variations are not smooth and cause the blurs the edges in the image. Bilateral filter overcomes this by filtering the image in both range and domain (space). Bilateral filtering is a local, nonlinear and non-iterative technique which considers both gray level (color) similarities and geometric closeness of the neighboring pixels. With bilateral filter the approximation sub-band results in loss of some image details, whereas that after each level of wavelet reconstruction flattens the gray levels cause unpleasing output image. To overcome the above issue extension of bilateral filtering with introduction of wavelets for thresholding has been proposed. Instead of direct filtering or direct wavelet domain thresholding of noisy image, the proposed method first obtains the filtered version of image using bilateral filtering and then this filtered version of image undergoes to wavelet domain thresholding using Bayes-shrink rules. In this approach the advantages of both the methods are achieved. To check the effectiveness of the proposed method in image denoising, we have compared the results with recent image denoising methods.

Keywords— Gaussian Noise, Image denoising, Filter Banks and Thresholding, Bilateral Filtering, Discrete Wavelet domain thresholding.

I. INTRODUCTION

An image is often corrupted by noise in its acquisition and transmission. For example during the image acquisition, the performance of imaging sensors is affected by a variety of factors, such as environmental conditions and by the quality of the sensing elements themselves. For instance, in acquiring images with a CCD camera, light levels and sensor temperature are major factors affecting the amount of noise in the resulting image. Images are also corrupted during transmission, due to interference in the channel used for transmission. Image denoising techniques are necessary to remove such random additive noises while retaining as much as possible the important signal features. The main objective of these types of random noise removal is to suppress the noise while preserving the original image details. Statistical filters like Average filter [1] [2], Wiener filter [3] can be used for removing such noises but the wavelet based denoising techniques proved better results than these filters. In general, image de-noising imposes a compromise between noise reduction and preserving significant image details. To achieve a good performance in this respect, a denoising algorithm has to adapt to image discontinuities. The wavelet representation naturally facilitates the construction of such spatially adaptive algorithms. It compresses essential information in a signal into relatively few, large coefficients, which represent image details at different resolution scales. In recent years there has been a fair amount of research on wavelet thresholding and threshold selection for signal and image denoising [4] [5] [6] [7] [8] [9], because wavelet provides an appropriate basis for separating noisy signal from image signal. Many wavelet based thresholding techniques like VisuShrink [10], BayesShrink [11] have proved better efficiency in image denoising. We describe here an efficient thresholding technique for denoising by analyzing the statistical parameters of the wavelet coefficients.

II. LITERATURE REVIEW

A. External Bilateral Filter

Filters based on Gaussian functions are of particular importance because their shapes are easily specified and both the forward and inverse Fourier transforms of a Gaussian function are real Gaussian functions. Further if the frequency domain filter is narrower, the spatial domain filter will be wider which attenuates the low frequencies resulting in increased smoothing/blurring. These Gaussian filters are typical linear filters that have been widely used for image denoising. Gaussian filters assume that images have smooth spatial variations and pixels in a neighborhood have close values, by averaging the pixel values over a local neighborhood suppresses noise while preserving image features. However, this assumption fails at edges where the spatial variations are not smooth and the application of Gaussian filter blurs the edges.

Bilateral filter overcomes this drawback by filtering the image in both range and domain (space). Bilateral filtering is a local, nonlinear and non-iterative technique which considers both gray level (color) similarities and geometric closeness of the neighboring pixels. Mathematically, the bilateral filter output at a pixel location p is calculated as follows:

$$I_f(p) = \frac{1}{W}\sum_{q\in S} G_{\sigma_s}(\|p-q\|)G_{\sigma_r}(|I(p)-I(q)|)I(q). \quad (2)$$

where, $G_{\sigma_s}(\|p-q\|) = e^{-\frac{\|p-q\|^2}{2\sigma_s^2}}$, represents geometric closeness function,

$G_{\sigma_r}(|I(p)-I(q)|) = e^{-\frac{|I(p)-I(q)|^2}{2\sigma_r^2}}$, represents gray level similarity function,

$W = \sum_{q\in S} G_{\sigma_s}(\|p-q\|)G_{\sigma_r}(|I(p)-I(q)|)$, represents a normalization constant.

$\|p-q\|$, represents Euclidean distance of p and q, with S as spatial neighborhood of p.

The parameters σ_s and σ_r control the performance of the bilateral filter. σ_s is responsible for blurring of image i.e., for large values of σ_s image will be blurred more; whereas σ_r is the noise

estimation parameter, and when equals to the noise standard deviation σ_n , results perfect denoising.

B. DISCRETE WAVELET TRANSFORM

The DWT is identical to a hierarchical sub-band system where the sub-bands are logarithmically spaced in frequency and represent octave-band decomposition. Due to the decomposition of an image using the DWT [12] the original image is transformed into four pieces which is normally labeled as LL, LH, HL and HH as in the

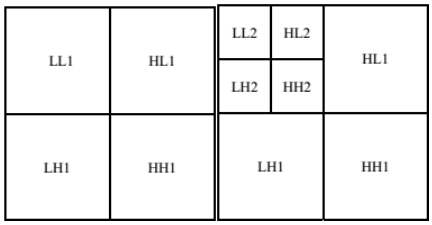

(a) One-level (b) Two-level

Fig. 1 Image decomposition by using DWT

schematic depicted in Fig.1(a). The LL sub-band can be further decomposed into four sub-bands labeled as LL2, LH2, HL2 and HH2 as shown in
Fig.1(b).

The LL piece comes from low pass filtering in both directions and it is the most like original picture and so is called the approximation. The remaining pieces are called detailed components. The HL comes from low pass filtering in the vertical direction and high pass filtering in the horizontal direction and so has the label HL. The visible detail in the sub-image, such as edges, have an overall vertical orientation since their alignment is perpendicular to the direction, of the high pass filtering and they are called vertical details. The remaining components have analogous explanations. The filters LD and HD shown in Fig. 2 are one-dimensional Low Pass Filter (LPF) and High Pass Filter (HPF) respectively for image decomposition. To obtain the next level of decomposition, sub band LL1 alone is further decomposed. This process continues until some final scale is reached. The decomposed image can be reconstructed using a reconstruction filter as shown in Fig. 3. Here, the filters LR and HR represent low pass and high pass reconstruction filters respectively. Here, since the image size is not changed after decomposition this DWT is called critically sampled transform without having any redundancy.

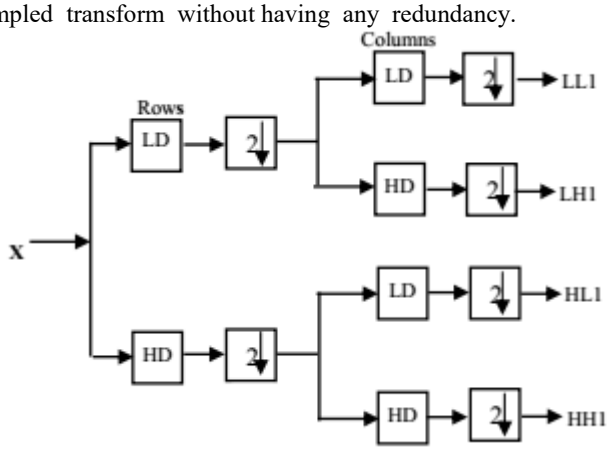

Fig. 2 Wavelet Filter bank for one-level image decomposition

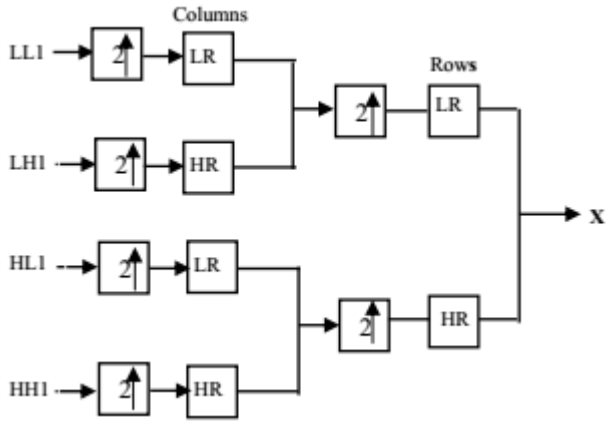

Fig. 3 Wavelet Filter bank for one-level image Reconstruction

An image is often corrupted by noise during its acquisition or transmission. The de-noising process is to remove the noise while retaining and not distorting the quality of the processed image .The traditional way of image de-noising is filtering. Recently, a lot of research about non-linear methods of signal de-noising has been developed. These methods are mainly based on thresholding the Discrete Wavelet Transform (DWT) coefficients, which have been affected by additive white Gaussian noise. Simple denoising algorithms that use DWT consist of three steps.

- Discrete wavelet transform is adopted to decompose the noisy image and get the wavelet coefficients.
- These wavelet coefficients are denoised with wavelet threshold.
- Inverse transform is applied to the modified coefficients and get denoised image.

The second step, known as thresholding, is a simple nonlinear technique, which operates on one wavelet coefficient at a time. In its most basic form, each coefficient is thresholded by comparing threshold, if the coefficient is smaller than threshold, set to zero; otherwise it kept as it is or it is modified. Replacing the small noisycoefficient by zero and inverse wavelet transform on the resulted coefficient may lead to reconstruction with the essential signal characteristics and with less noise.

During the last decade, a lot of new methods based on wavelet transforms have emerged for removing Gaussian random noise from images. The denoisingv process is known as wavelet shrinkage or thresholding. Both VisuShrink and SureShrink are the best known methods of wavelet shrinkage proposed by Donoho and Johnstone.

For VisuShrink, the wavelet coefficients w of the noisy signal are obtained first. Then with the universal threshold T (is the noise level and N is the length of the noisy signal), the coefficients are shrinked according to the softshrinkage rule is used to estimate the noiseless coefficients. Finally, the estimated noiseless signal is reconstructed from the estimated coefficients. VisuShrink is very simple, but its disadvantage is to yield overly smoothed images because the universal threshold T is too large.

Just like VisuShrink, SureShrink also applies the soft shrinkage rule, but it uses independently chosen thresholds for each subband through the minimization of the Stein's unbiased risk estimate (SURE) (Stein, 1981). VisuShrink performs better than SureShrink, producing more detailed images.

C. WAVELET THRESHOLDING

The first step in the denoising process is to obtain the wavelet transform of the signal x (n) using a suitable basis function. Then, a threshold is obtained using one of the above thresholding techniques [5]. Figure 4 shows the nature of thresholding.

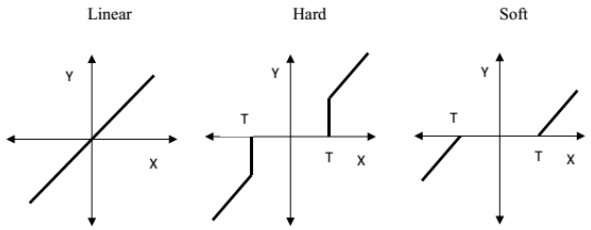

Figure 4: Linear, Hard and Soft Thresholding functions

The hard thresholding zeroes out, or shrinks the coefficients that have magnitudes below the threshold, and leaves the rest of the coefficients unchanged Soft thresholding extends hard thresholding by shrinking the magnitude of the remaining coefficients by , producing a smooth rather than abrupt transition to zero. The smooth transition to zero results in noticeably fewer artifacts upon reconstruction, especially when dealing with image denoising. Hence, soft thresholding is generally better for denoising due to its inherent smoothing, whereas hard thresholding is better suited for data compression. In either case, perfect reconstruction is not possible since some of the signal components are thrown away with the undesired noise. Furthermore, any thresholding technique other than the universal threshold will preserve some of the noise-only coefficients. Some significant research has been done using wavelet based de-noising.

The hard-thresholding T_H can be defined as:

$$T_H = \begin{cases} x, & |x| \geq t \\ 0, & inother \end{cases}$$

where, t is the threshold value. A plot of hard thresholding i.e., T_H is shown in Figure 4;

Thus, all coefficients whose magnitude is greater than the selected threshold value t remain as they are and the others with magnitudes smaller than t are set to zero. It creates a region around zero where the coefficients are considered negligible. Soft thresholding is where the coefficients with greater than the threshold are shrunk towards zero after comparing them to a threshold value. It is defined as follows.

$$T_s = \begin{cases} sign\ (x)(|x| - t), & |x| > t \\ 0, & otherwise \end{cases}$$

In general, it is observed that the hard thresholding technique is much better than soft thresholding and yields more visually pleasant images. This is because the soft thresholding technique is discontinuous and yields abrupt artifacts in the recovered images. Also, the hard thresholding technique yields a smaller minimum mean squared error compared to hard form of thresholding. Apart, from the soft and hard thresholding a custom trimmed thresholding is also considered in the work.

III. PROPOSED ALGORITHM

For better & easy understanding the proposed algorithm steps are as follows:

Step 1: Select input test image 'Lena' and resize it for fast computation.
Step 2: Add AWGN gaussian noise to obtain corrupted image.
Step 3: Apply bilateral filtering to noisy image.
Step 4: Subtract the filtered image from noisy image.
Step 5: The subtracted image undergone to wavelet decomposition.
Step 6: Then Bayes Thresholding is applied on the decomposed detailed wavelet coefficients.
Step 7: Select thresholding type i.e., soft, hard or trimmed.
Step 8: Reconstruction of image by taking IDWT of decomposed coefficients and adding them with filtered output.
Step 9: Quality measure calculations i.e., PSNR, MSE, MAE and SSIM.

The pictorial representation of above algorithm is shown in Figure 5.

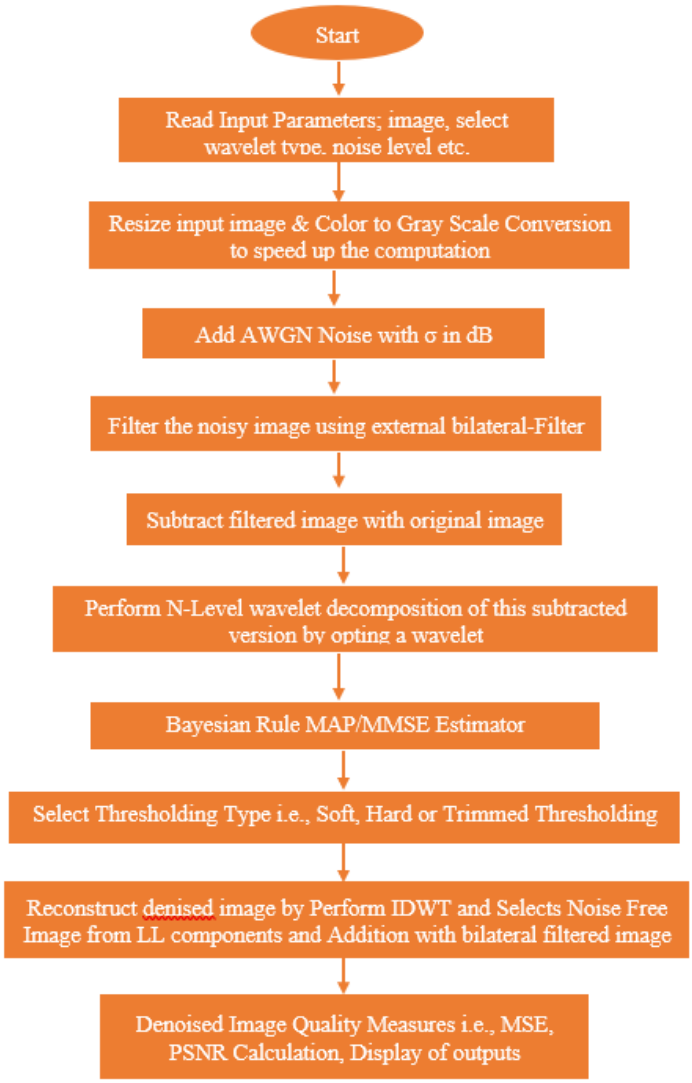

Figure 5: Proposed Algorithm

IV. SIMULATION RESULTS & DISCUSSIONS

To check the performance of the proposed image denoising using external bilateral filtering and wavelet domain thresholding technique, simulation has been performed for Lena test image using bilateral filters only and with the proposed method. The performance of the proposed method has been compared for MSE, MAE, PSNR and SSIM image quality parameters with

recent similar kind of image denoising methods. Simulation results values of PSNR & MSE for different wavelets are tabulated in Table-I.

Figure 6: Original test image 'Lena' used for simulation.

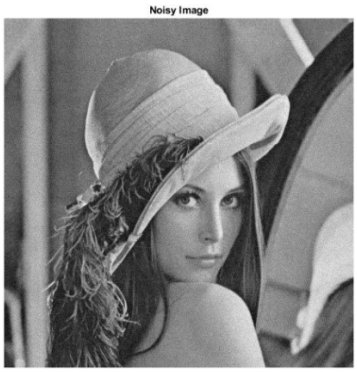

Figure 7: Gaussian noise corrupted test image 'Lena' for noise variance σ=10.

Figure 8: Denoised noisy image 'Lena' using external bilateral filtering only.

Figure 9: Denoised noisy image 'Lena' using proposed external bilateral filtering and wavelet domain thresholding.

For simulation first image is taken and it is corrupted by gaussian noise from range of 5 to 30 dB, to check the effectiveness of the proposed approach for a wide range of noise variance, then the image is denoised using external bilateral filter.

Table-I. Simulations Results Summary

Noise Variance	Noisy Image				Using external bilateral Filtering only				Using proposed external bilateral Filtering with wavelet domain thresholding			
σ	PSNR (dB)	MSE	MAE	SSIM	PSNR (dB)	MSE	MAE	SSIM	PSNR (dB)	MSE	MAE	SSIM
5	34.14	25.08	22	0.8421	34.58	22.65	38	0.9021	**37.26**	**12.32**	**26**	**0.9319**
10	28.13	100.02	45	0.6070	32.04	40.60	53	0.8687	**34.07**	**25.52**	**43**	**0.8884**
15	24.61	224.22	67	0.4466	30.64	56.18	71	0.8419	**32.01**	**40.98**	**56**	**0.8554**
20	22.13	398.11	89	0.3409	29.73	69.17	82	0.8172	**31.57**	**56.98**	**71**	**0.8269**
25	20.23	616.60	111	0.2700	29.05	80.84	88	0.7922	**29.38**	**75.01**	**83**	**0.7970**
30	18.70	877.39	133	0.2202	28.47	92.31	92	0.7668	**29.57**	**90.42**	**90**	**0.7685**

Table-II. Simulations Results Comparison

Noise Variance σ → / **Algorithm ↓**	**σ =10**	**σ =20**	**σ =30**
This Work	**34.07**	**31.57**	**29.57**
IDBP-CNN [1]	33.94	31.17	29.19
P&P-BM3D [1]	33.56	30.41	28.53
IRCNN [1]	33.13	31.17	29.31
IDBP-BM3D [1]	33.62	30.70	28.93
CD-B-k D [2]	33.95	31.35	29.55
HMT [3]	33.81	30.36	28.45
NIG-NSCT [5]	33.74	31.18	29.09
NIG-WT [5]	31.97	28.42	26.27
Bayes-Shrink [3]	33.29	30.14	28.26
NIG-CT [7]	33.32	31.06	29.33
AS-CT [10]	33.77	31.48	29.64
Visu-shrink [12]	30.65	27.76	26.33

To check the effectiveness of the proposed work, simulations results comparison has been done, which is shown in Table-II. It can be seen that the proposed approach seems to outperforms bilateral filtering and many of the existing denoising methods, in terms of denoised image PSNR for various values of noise variance.

V. CONCLUSION

In this work an image de-noising method with external bilateral filtering and wavelet domain thresholding has been proposed. To overcome the drawbacks of gaussian and bilateral filtering methods extension of bilateral filtering with introduction of wavelets for thresholding has been proposed. Instead of direct filtering or direct wavelet domain thresholding of noisy image, the proposed method first obtains the filtered version of image using bilateral filtering and then this filtered version of image undergoes to wavelet domain thresholding using Bayes-shrink rules. In this approach the advantages of both the methods are achieved. To check the effectiveness of the proposed method in image denoising, we have compared the results with recent image denoising methods. Simulation results shows that the proposed method outperforms many of existing image denoising methods.

REFERENCES

[1] Tom Tirer et al., "Image Restoration by Iterative Denoising and Backward Projections", IEEE Transactions on Image Processing, Volume: 28, Issue: 3, March 2019.

[2] H. Sadreazami et al., "Contourlet Domain Image Denoising based on the Bessel k-form Distribution", IEEE 28th Canadian Conference on Electrical and Computer Engineering Halifax, Canada, May 3-6, 2015.
[3] Liqiang Shi, "An Improved Image Denoising Algorithm", Seventh IEEE International Conference on Measuring Technology and Mechatronics Automation, 2015.
[4] Cuong Cao Pham et al., "Efficient image sharpening and denoising using adaptive guided image filtering", IEEE, IET Image Processing Magazine, Pp. 71 – 79, 2015.
[5] Wangmeng Zuo et al., "Gradient Histogram Estimation and Preservation for Texture Enhanced Image Denoising", IEEE Transactions on Image Processing, Volume 23, Nn. 6, JUNE 2014.
[6] Vikas Gupta et al., "Image Denoising using Wavelet Transform method", Tenth IEEE International Conference on Wireless and Optical Communications Networks (WOCN), Pp 1-4, 2013.
[7] Fuqing Jia et al., "Image Denoising Using Hyper-Laplacian Priors and Gradient Histogram Preservation Model", 12th IEEE International Conference on Signal Processing (ICSP), 2014.
[8] Ajay Boyat et al., "Image Denoising using Wavelet Transform and Median Filtering", Nirma University IEEE International Conference on Engineering (NUiCONE), 2013.
[9] Paras Jain & Vipin Tyagi, "Spatial and frequency domain filters for restoration of noisy images", IETE Journal of Education, 54(2), 108-116, 2013.
[10] Maggioni, M., Katkovnik, V., Egiazarian, K., Foi, "A.: Nonlocal transform-domain filter for volumetric data denoising and reconstruction", IEEE Transaction on Image Processing, 22(1), 119–133, 2013.
[11] Silva, R.D., Minetto, R., Schwartz, W.R., Pedrini, H.: Adaptive edge-preserving image denoising using wavelet transforms. Pattern Analysis and Applications. Springer, Berlin doi:10.1007/s10044-012-0266-x, 2012.
[12] Zhang, Y., Li, C., Jia, J, "Image denoising using an improved bivariate threshold function in tetrolet domain", 2013.
[13] Dai, L., Zhang, Y., Li, Y.: Image denoising using BM3D combining tetrolet prefiltering. Inf. Technol. J. 12(10), 1995–2001, 2013.
[14] He, K., Sun, J., Tang, X.: Guided image filtering. In: Proceedings European Conference on Computer Vision, pp. 1–14, 2010.
[15] Porikli, F, "Constant time O(1) bilateral filtering", In Proceeding IEEE Conference on Computer Vision and Pattern Recognition, Anchorage, pp. 1–8, 2008.
[16] Yang, Q., Tan, K.H., Ahuja, N, "Real-time O(1) bilateral filtering", In Proceedings IEEE Conference on Computer Vision and Pattern Recognition, Miami, pp. 557–564, 2009.
[17] Farbman, Z., Fattal, R., Lischinski, D., Szeliski, "R.: Edge-preserving decompositions for multi-scale tone and detail manipulation", ACM Transactions on Graphics 27(3), 1–10, 2008.
[18] Paris, S., Durand, F, "A fast approximation of the bilateral filter using signal processing approach", In the Proceeding of European Conference on Computer Vision, pp. 568–580, 2006.
[19] Gonzalez, R.C., Woods, R.E.: Digital image processing, 3rd edn. Prentice-Hall, Upper Saddle River, 2008.
[20] Blu, T., Luisier, F, "The SURE-LET approach to image denoising", IEEE Transaction Image Processing, 16(11), 2778–2786, 2007.
[21] Paris, S., Durand, F.: A fast approximation of the bilateral filter using signal processing approach. In: Proceeding European Conference on Computer Vision, pp. 568–580, 2006.
[22] Dabov, K., Foi, A., Katkovnik, V., Egiazarian, K.: Image denoising with block-matching and 3D filtering. In: SPIE electronic imaging: algorithms and systems, vol. 6064, pp. 606414-1–606414-12, 2006.
[23] Yuan, X., Buckles, B.: Subband noise estimation for adaptive wavelet shrinkage. In: Proceeding 17th International Conference on Pattern Recognition, vol. 4, pp 885–888, 2004.
[24] Elad, M.: On the origin of the bilateral filter and ways to improve it. IEEE Transaction Image Processing, 11(10), 1141–1151, 2002.
[25] Sendur, L., Selesnick, I.W.: Bivariate shrinkage functions for wavelet-based denoising exploiting interscale dependency. IEEE Trans. Signal Process. 50(11), 2744–2756, 2002.
[26] Chang, S., Yu, B., Vetterli, M.: Spatially adaptive wavelet thresholding based on context modeling for image denoising. IEEE Trans. Image Process. 9(9), 1522–1531, 2000.